alternativenergy
Powered by BP

bp

Nanoscale Gravity Sensors for Monitoring CO_2 Storage : NASCOM

Kevin Dodds
25th March 2010

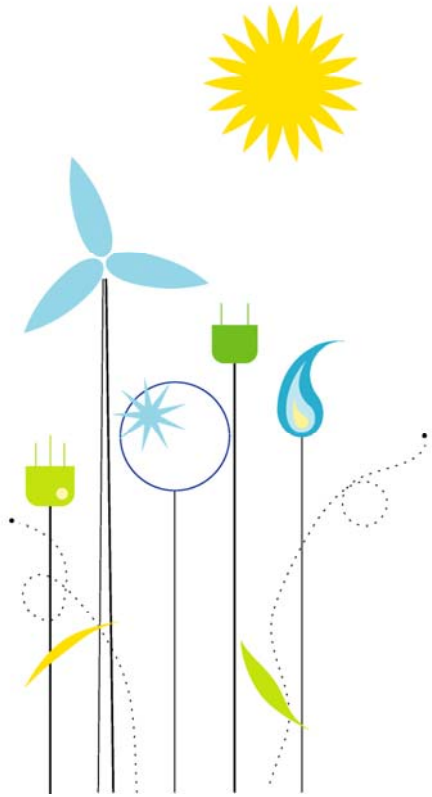

alternativenergy
Powered by BP

bp

Monitoring Effective management of CCS

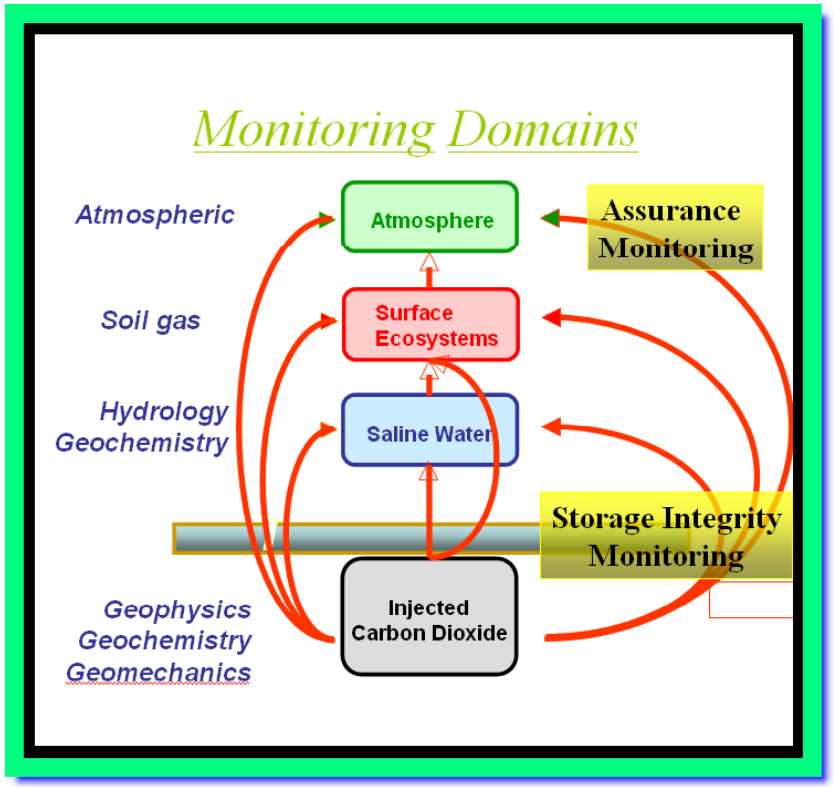

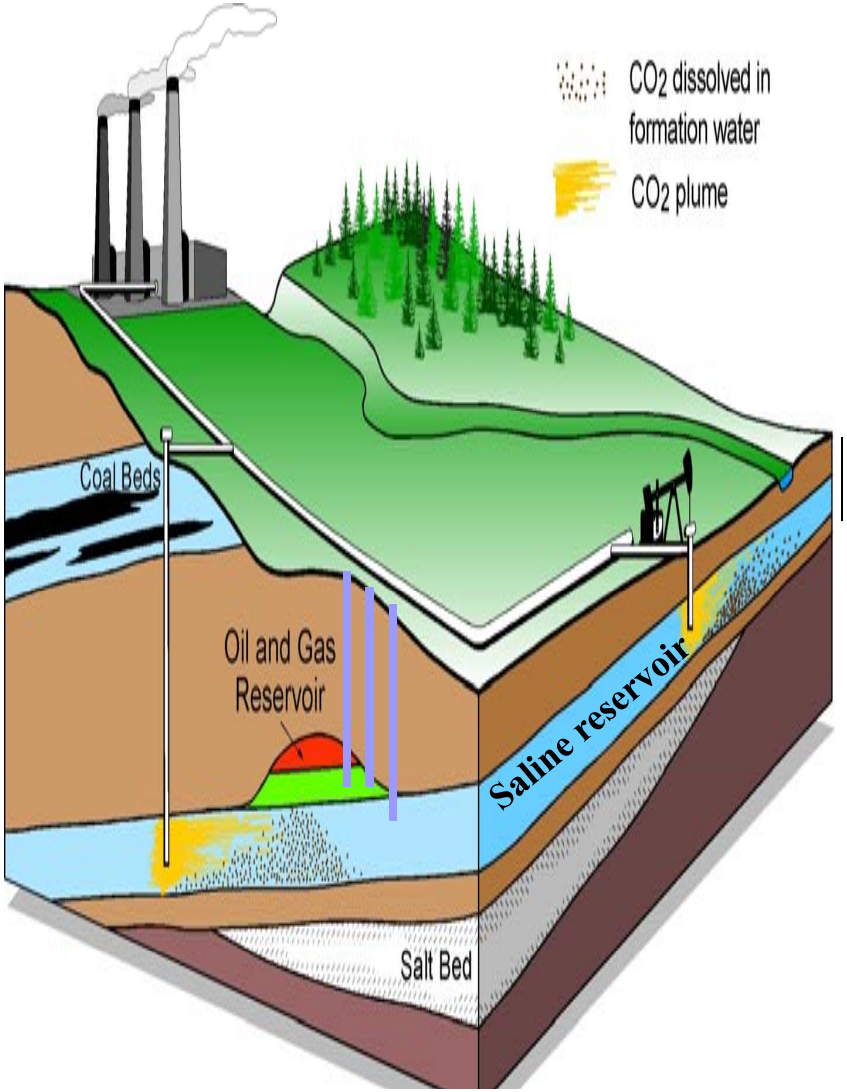

alternativenergy
Powered by BP

Project Overview

bp

Objectives

- Development of innovative gravity imaging sensor based upon a unique high sensitivity accelerometer capable of making quantitative measurements of CO_2 volume for deployment down reservoir boreholes.

Technology

WP1 : development of multi-axis MEMS gravity sensors with a resolution of 1 microgal

WP2 : development of a precision MEMS gyroscope less than 10 deg/hr/rt-Hz.

WP3 : development of downhole housing, telemetry and signal processing.

WP4 : adapt existing commercial gravity field imaging software to develop two and three dimensional sub-surface gravity images from multiple sensor inputs.

WP5 : will provide a market deployment study based on the sensor characteristics

Partners

- BP Alternative Energy
- University of Cambridge
- OTM (subcontractor to BP)

Timeframe

- 1st March 2010 – 28th February 2013

Schedule/cost:

- 36 months/total project
- 1.2 £M (TSB grant 50%)

UNIVERSITY OF CAMBRIDGE

Resonant Accelerometer

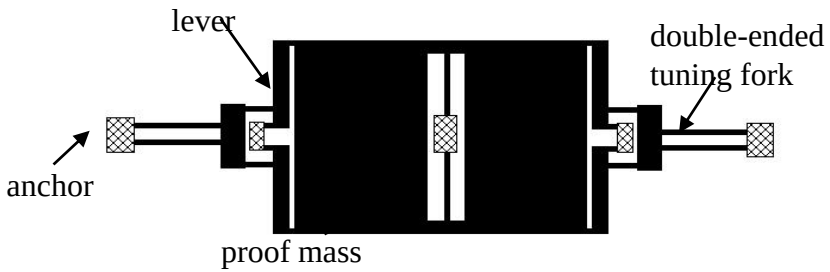

Resonant Gyroscope

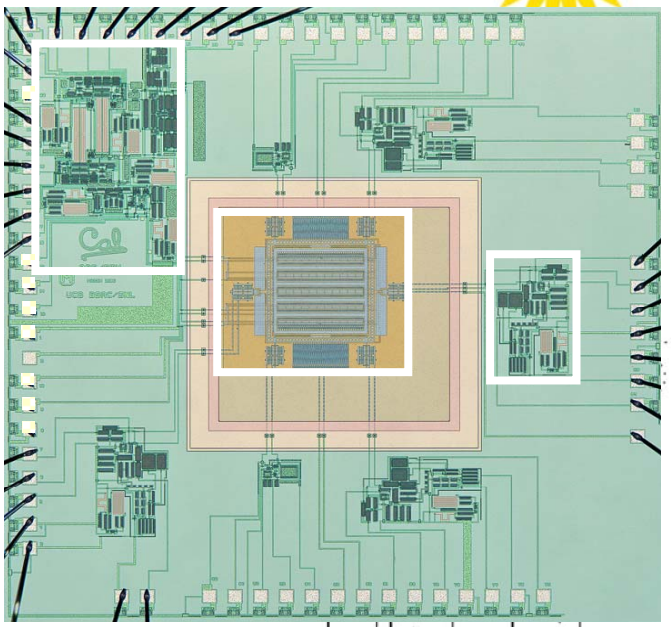

alternativenergy
Powered by BP

Gas Coning

- NASCOM Applications
  - Monitoring fluid movement such as this coning phenomenon
  - Time lapse (repeated) measurements as CO2 plume develops, differences due solely to changes in plume
  - Differential gravity provides direction and rate of change
  - Operational specifications are being developed in collaboration with DOE Cranfield (SECARB) project

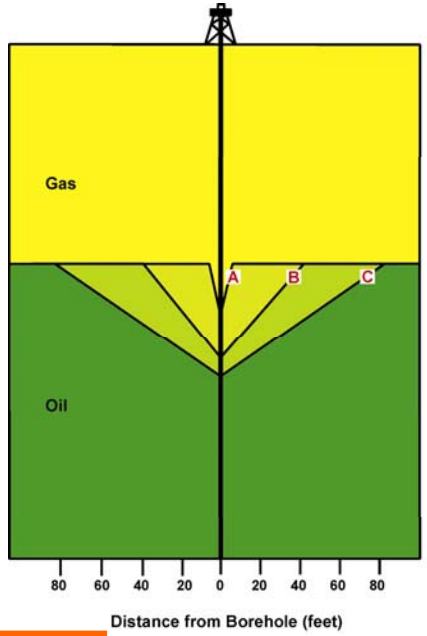

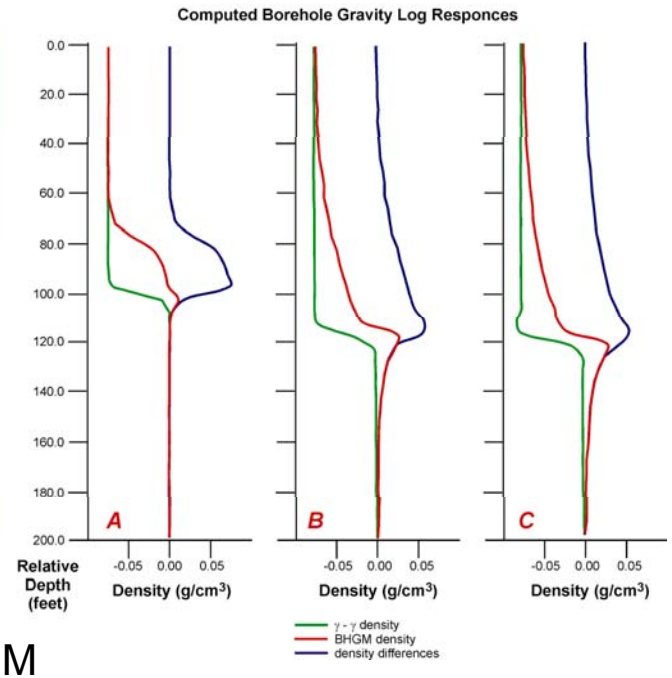

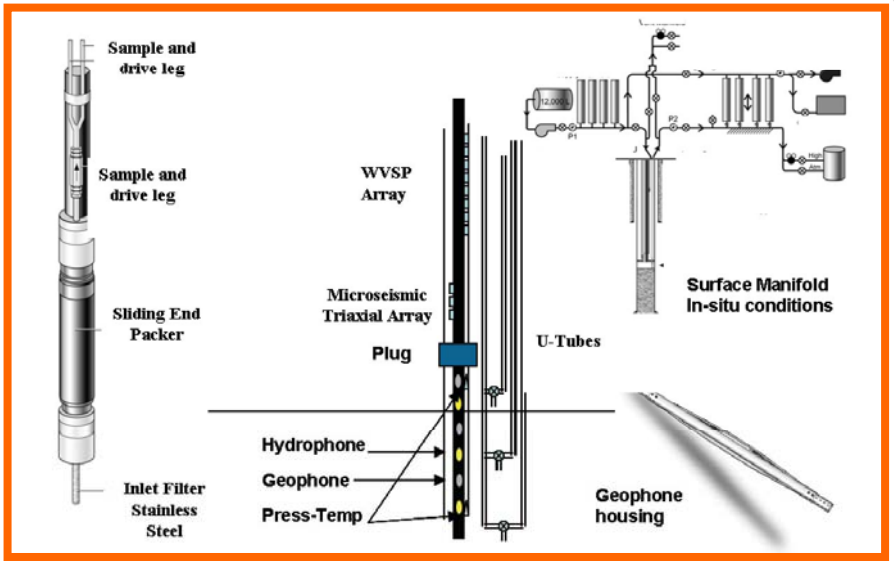

Otway CO2CRC-DOE integrated completion

- NASCOM
  - Cheap and highly sensitive MEMS can be deployed in arrays for continuous monitoring
  - LINKAGE with Carbon Capture MMV Project CCP to provide design criteria for modular sensor completion (LBNL)
  - Gyroscope has potential for standalone applications for well orientation

alternativenergy Powered by BP

MMV Scope

- **Up-to-date synthesis of UK and EU regulatory requirements for offshore storage, as they evolve.**
- **Assessment of likely leakage fluxes based on real site measurements and scenario modelling, with respect to the sensitivity, accuracy and applicability of monitoring tools, currently available and under development.**
- **Practical guidelines for recommended monitoring strategies for a range of potential UK offshore storage sites.**
- **Identification and prioritisation of the key technical and methodological developments in monitoring capability which will be required to implement UK offshore storage. This is the key project outcome and will require close interfacing between technological development and regulatory requirements.**

WP1: **Assessment of current experience**. This provides a benchmark of current monitoring and verification technologies against expected needs and identifies gaps.

WP2: **Identify means of filling gaps**. This will examine potential improved technologies and identify the more prospective means of addressing key gaps.

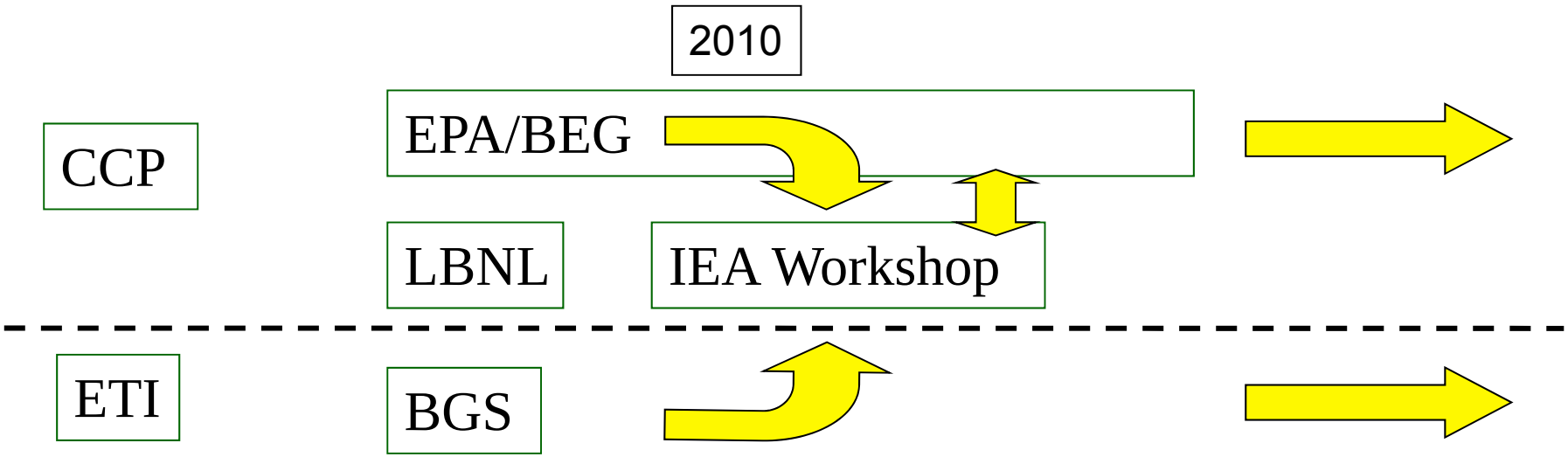
2010
CCP
EPA/BEG
LBNL
IEA Workshop
ETI
BGS

alternativenergy
Powered by BP

bp

Questions ?

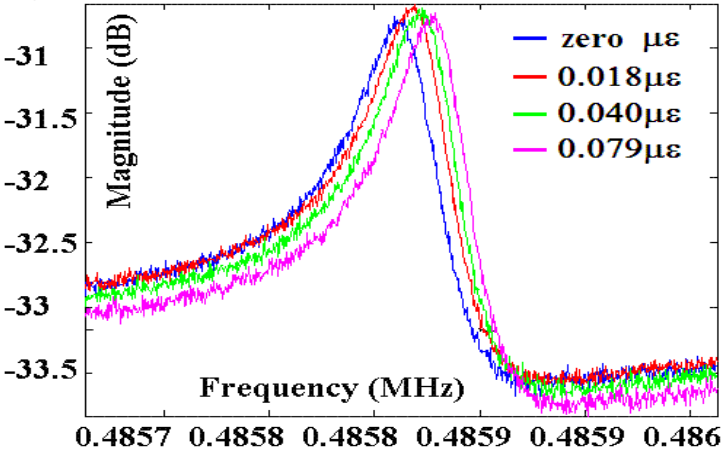

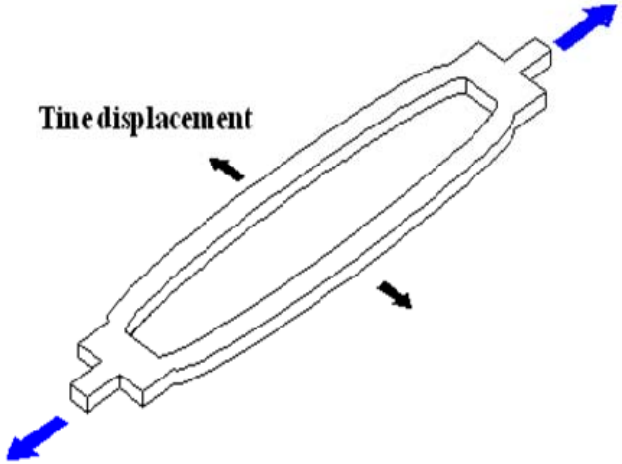

alternativenergy
Powered by BP

bp

Thanks for your attention

For further information please contact:

Kevin.Dodds@bp.com