Corbett & Schreck, P.C.
Attorneys at Law
820 Gessner, Suite 1390
Houston, Texas 77024

Douglas Corbett
Matthew M. Schreck

Telephone: (713) 464-5759
Fax: (713) 461-9109

February 10, 1999

1999 FEB 10 P 1:58

The Department of Energy
Office of Coal and Power Im/Ex
Office of Coal and Power Systems (FE-27)
Office of Fossil Energy
1000 Independence Avenue, S.W.
Washington, D.C. 10485

Re: Sumas Energy 2, Inc.
Docket No. PP-204

Dear Sir or Madam:

Enclosed herewith please find an original and fifteen copies of the "Application of Sumas Energy 2, Inc. for Presidential Permit." Also enclosed herewith is an additional copy to be time-stamped and returned to the undersigned in the self-addressed, stamped envelope included herewith.

A check in the amount of $150 is also included herewith for the filing fee.

Lastly, a computer disk with a copy of the application in Word Perfect format is also included herewith.

Please call the undersigned if you have any questions. Thank you for your assistance with this matter.

Very truly yours,

Matthew M. Schreck
Attorney for Sumas Energy 2, Inc.

Enclosures

UNITED STATES OF AMERICA
BEFORE THE
DEPARTMENT OF ENERGY
OFFICE OF FOSSIL ENERGY

Sumas Energy 2, Inc.) Docket No. PP-____

APPLICATION OF SUMAS ENERGY 2, INC.
FOR PRESIDENTIAL PERMIT

Pursuant to Section 205.320, *et seq.*, of the U.S. Department of Energy, Office of Fossil Energy's ("OFE") administrative procedures (10 C.F.R. §205.320, *et seq.* (1998)), Sumas Energy 2, Inc. ("SE2") hereby respectfully files this application for a Presidential Permit authorizing the construction, connection, operation, and maintenance of facilities for the transmission of electric energy at the international boundary between the United States and Canada, as more fully described herein.[1] In support of this application, SE2 respectfully states as follows:

I.

Identity of Applicant

The full, legal name of Sumas is Sumas Energy 2, Inc. SE2's offices are located at 335 Parkplace, Suite 110, Kirkland, Washington 98033. SE2 is a corporation organized in the State of Washington, for the purpose of developing, constructing, owning, and operating a planned 710 megawatt electrical generation station and appurtenant facilities to be located in Sumas, Washington

[1] SE2 shall be filing with the OFE a separate application seeking approval for the export of electric energy from the United States to Canada over the transmission facilities in question.

(the "Project").[2] SE2 has no partners in the Project. Accordingly, SE2 shall be the sole owner and operator of the Project.

II.

Communications

All communications and correspondence regarding this application should be addressed to the following person:

Matthew M. Schreck
Corbett & Schreck, P.C.
820 Gessner, Suite 1390
Houston, Texas 77024
(713) 464-5759 — Telephone
(713) 461-9109 — Facsimile

III.

Foreign Affiliation and Contracts

SE2 is not affiliated with, nor is it being assisted by, any foreign government or instrumentality thereof. Further, SE2 does not have any agreement pertaining to ownership by a

[2] The Project shall be located adjacent to a 125-megawatt electrical generation facility owned and operated by an affiliate of SE2— Sumas Energy, Inc. ("SEI"), which has been in operation since 1993. The operations, financing, and contractual relationships of SE2 are separate and distinct from the adjacent SEI facility. As will be detailed more fully in the Environmental Assessment SE2 is preparing, SE2 is siting the Project in the U.S. primarily to take advantage of the economies of scale resulting from being adjacent to the SEI facility. For example, SE2 intends to utilize the existing natural gas pipeline right-of-way secured by SEI for SE2' own pipeline, thus diminishing the time and cost of negotiating new right-of-way agreements. Secondly, SEI has established an excellent working relationship with the City of Sumas and State of Washington regulators. Through these relationships, SE2 believes that the state and local permitting process will be easier for SE2 than if it constructed the Project elsewhere. Lastly, and most importantly, SE2 believes the economics for constructing the Project in the City of Sumas are more favorable than constructing it elsewhere, particularly with respect to gas supply and operating costs.

foreign government or instrumentality thereof, and SE2 does not have any agreement for assistance from any foreign government or instrumentality thereof.

SE2 currently has no effective contracts with any foreign government or any foreign private concerns relating to any purchase, sale, or delivery of electric energy. The electric power generated by the Project will be delivered across the U.S./Canada border into the BC Hydro system. SE2 currently is negotiating to sell the power to British Columbia Power Exchange Corporation ("Powerex"). Upon execution of this contract, SE2 shall provide the OFE with notice and, upon request by the OFE, a copy of the executed contract.

IV.

Compliance with Law

As set forth in an opinion of counsel attached hereto as Exhibit "A", the construction, connection, operation, or maintenance of the proposed transmission facilities described herein is within the corporate powers of SE2. As well, SE2 has complied with, or will comply with all pertinent Federal and State laws related to the construction, connection, operation, or maintenance of the proposed transmission facilities. A list of all applicable federal, state, and permits and related requirements is set forth on Exhibit "B" attached hereto.

V.

Proposed Transmission Line

SE2 proposes to construct a double circuit, 230 kV alternating current ("AC"), above-ground transmission line from the Project, located in Sumas, Washington, across the U.S./Canadian border and into British Columbia, where it will interconnect with the transmission facilities of BC Hydro at its Clayburn substation. The proposed transmission line will be approximately six and one-

half (6½) miles in length and have a maximum capacity of up to 800 MW. The line will be constructed, owned and operated by SE2 and/or affiliated company(ies). It will run approximately one-half mile on the U.S. side of the border entirely within the City of Sumas. The majority of this route is on City of Sumas and Burlington Northern Railway rights-of-way. The line will pass through one parcel of private property. On the Canadian side, the line will run approximately six miles to the BC Hydro Clayburn substation in Abbotsford, British Columbia. The majority of the Canadian route, about six (6) miles, is on Canadian Pacific Railway right-of-way. The last approximately one-half (½) mile is over BC Hydro property. At Clayburn, the power line will be integrated into the BC Hydro system.[3] A cathodic protection system consisting of sacrificial anodes will be used if earth resistivity levels indicate the need for it.

As set forth on the attached schematic diagrams (Exhibit "C"), the Project will be interconnected to the BC Hydro 230 kV transmission system through a new switchyard located at the Project site and the proposed six-mile transmission line. The 230 kV switchyard will contain two 16/230 kV transformers, one for each of the combustion turbine generators and two 13.8/230 kV transformers for each of the steam turbine generators, to step up generated voltage to transmission voltage. The transformers will connect to the 230 kV switchyard. The 230 kV switchyard will be arranged in a ring configuration complete with power circuit breakers, disconnect switches, instrument transformers, surge arresters, insulators, control building, protective relaying, and

[3] The power line right-of-way is along a heavy-haul arterial road (Bob Mitchell Avenue), the Burlington Northern Railway and one parcel of industrial property that is privately owned within the City of Sumas to the U.S./Canadian border. From the border, the line runs along the Canadian Pacific Railway into the BC Hydro Clayburn transmission and distribution substation. The Clayburn station has sufficient space to accommodate the required expansion for interconnection to the BC Hydro system.

metering. The switchyard will utilize rigid, tubular aluminum buswork complete with aeolian vibration damping cable, expansion joints, and fittings set on 11-foot phase-to-phase spacing.

Figures showing the structure of the towers are attached hereto as Exhibit "D."

Equipment, buswork, and structures will be designed to withstand the large forces created by the available fault current conditions. All equipment and buswork will be designed and installed to limit the effects of corona by including corona shields and rings, as needed.

The dead-end towers, rigid bus supports, and equipment supports will be steel type. The 230 kV switchyard structures will be arranged to include adequate space for maintenance and replacement of large equipment, such as transformers and power circuit breakers. Direct stroke lightning protection is not required in this area. Overhead shield wires will be high strength steel wires arranged to provide shield zones of protection.

The relay and control panels, communication equipment, metering panels will be located in the Power Plant Building. The Power Plant DC battery systems, low voltage AC systems, and cableways will also service the switchyard equipment. Protective relaying will be provided as required by BC Hydro to protect all equipment and 230 kV transmission lines terminating in the switchyard. The protective relaying along with the circuit breakers will detect and then isolate faulted equipment so as to minimize outages and damage.

The total estimated cost of the proposed transmission line is $7.803 million, which includes line costs, right-of-way acquisition, engineering/consultant work, and substation costs.

The Project schedule calls for construction of the Project to begin in December, 1999, with commercial operations to commence on or before December, 2001.

All of the Project's power generation will be transmitted on the proposed transmission line and sold in Canada. No sales of power from the Project are planned in the U.S. Moreover, the Project facilities are not planned to be interconnected with any domestic transmission facilities or any other Canadian transmission facilities.

Attached hereto as Exhibit "E" is a general area map and a detailed map showing the physical location, latitude and longitude of the Project, transmission line, and the facility on the international border.

VI.

Environmental Impacts

SE2 is in the process of preparing an Environmental Assessment ("EA") for the proposed construction of the Project and the transmission line, in accordance with the National Environmental Policy Act of 1969 ("NEPA").[4] Upon its completion, the EA shall be submitted to the OFE. Included in the EA will be a review of the environmental impacts, if any, of the Project and the proposed transmission line, a summary of the proposed mitigation steps, if any, a brief description of all practical alternatives to the proposed transmission line, and a discussion of the general environmental impacts of each alternative.

VII

Public Interest

SE2's construction of the proposed power transmission line is in the public interest and should, therefore, be authorized by the OFE. In particular, SE2's proposal will have no impact on the reliability of the U.S. electric power supply system because SE2's Project is not planned to be

[4] 42 U.S.C. §4321, *et seq.* (1998).

interconnected with the domestic power transmission grid. That is, all of the power generated by the Project is planned to be directly transmitted across the U.S./Canadian border through a stand-alone transmission line that is not interconnected with any domestic facilities.[5] Therefore, the existing area generation and transmission will not be impacted.

Moreover, SE2 does not believe that its proposal will result in any detrimental environmental consequences if approved. As noted above, SE2 is in the process of preparing an EA in accordance with the requirements of NEPA. SE2 believes that the EA will show that there will be no significant environmental impacts resulting from its proposal, and that the construction and operation of the proposed transmission line and the related export of power to Canada will not constitute a major Federal action which could significantly affect the quality of human environment within the meaning of NEPA.[6]

---

[5] Accordingly, there will be no need for the OFE to condition SE2's Presidential Permit on compliance with the transmission open-access principles contained in the Federal Power Act and the Federal Energy Regulatory Commission's Order Nos. 888 and 888-A.

[6] An affidavit prepared in compliance with Section 205.322(e) of the OFE's regulations is attached hereto as Exhibit "F."

VIII.

Conclusion

WHEREFORE, SE2 respectfully requests that the OFE issue to SE2 a Presidential Permit authorizing the construction, connection, operation, and maintenance of facilities for the transmission of electric energy at the international boundary between the United States and Canada.

Very truly yours,

SUMAS ENERGY 2, INC.

By: _____

Matthew M. Schreck
Corbett & Schreck, P.C.
820 Gessner, Suite 1390
Houston, Texas 77024
(713) 464-5759

Attorney for Sumas Energy 2, Inc..

Dated: February 10, 1999

Exhibit A

FOSTER PEPPER & SHEFELMAN PLLC
ATTORNEYS AT LAW

December 23, 1998

Office of Fossil Energy
United States Department of Energy

Re: Sumas Energy 2, Inc.

Ladies and Gentlemen:

We have acted as counsel to Sumas Energy 2, Inc., a Washington corporation (the "Company"), in connection with its Request for a Presidential Permit and a Power Export Authorization (the "Request"). This opinion is delivered to you pursuant to 10 CFR Section 2.05.322(a)(6) of the Regulations of the Office of Utility Systems of the Economic Regulatory Administration.

In connection with this opinion, we have reviewed and are familiar with the Articles of Incorporation and Bylaws of the Company and the Request, and we have reviewed such other instruments, certificates, documents and records as we have deemed necessary for purposes of this opinion.

Based upon the foregoing, we are of the opinion that the construction, connection, operation and maintenance of the facilities as proposed in the Request is within the corporate power of the Company.

The opinions expressed in this letter are solely with respect to the internal laws of the state of Washington. The foregoing opinion is being delivered solely to you in connection with the Request and may not be relied on by you for any other purpose or by any other person for any purpose without our written consent.

Very truly yours,

FOSTER PEPPER & SHEFELMAN PLLC

Foster Pepper & Shefelman PLLC

cc: Sumas Energy 2, Inc.

50060118.02

1111 THIRD AVENUE
Suite 3400
SEATTLE
Washington
98101-3299

Telephone
(206)447-4400
Facsimile
(206)447-9700
Website
WWW.FOSTER.COM

ANCHORAGE
Alaska

BELLEVUE
Washington

PORTLAND
Oregon

SEATTLE
Washington

SPOKANE
Washington

Exhibit B

APPLICABLE FEDERAL, STATE AND LOCAL PERMIT REQUIREMENTS

Permit or Requirement	Agency/Statute & Regulation	Application §§
	Federal	
National Environmental Policy Act (NEPA)	The Department of Energy, Office of Fossil Energy (DOE/OFE) is the NEPA Lead Agency. 42 U.S.C. §§ 4321 et seq., 40 CFR Part 1500 et seq., 10 CFR Part 1021	§§ 2.7.1; 2.17.4
Department of Army Dredge and Fill Permit(s)	U.S. Army Corps of Engineers (USCOE) Clean Water Act, § 404; Rivers and Harbors Appropriation Act of 1899, § 10; 33 U.S.C. § 1344; 33 CFR Part 320 et seq.; 40 CFR Part 230 et seq.	§§ 2.14.3; 2.17.5; 3.4.1.2
Threatened or Endangered Species Assessment	NEPA lead agency (DOE/OFE) Endangered Species Act, §7; 16 U.S.C. § 1531 et seq.; 50 CFR Pt 402	§ 3.4.2
Historic Preservation/Landmark Review	NEPA lead agency (DOE/OFE) National Historic Preservation Act, § 106; 16 U.S.C. § 470 et seq.; 36 CFR §§ 60-63, 800; Historic Sites, Buildings, Objects, and Antiquities, 16 U.S.C. § 469 et seq.; 36 CFR §§ 296.1; 43 CFR §§ 7.1 et seq.	§ 5.1.7
Gas Pipeline Safety Approval	U.S. Department of Transportation, Office of Pipeline Safety 49 CFR part 192	
Presidential Permit for Gas Pipeline Border Crossing Facility Border Crossing	Department of Energy, Federal Energy Regulatory Commission (FERC) 15 U.S.C. § 717b, 18 CFR § 153.10, et seq.	

APPLICABLE FEDERAL, STATE AND LOCAL PERMIT REQUIREMENTS

Permit or Requirement	Agency/Statut & Regulation	Application §§
Natural Gas Import Authorization Border Crossing	DOE/OFE Natural Gas Act § 3, 15 U.S.C. § 717b; 18 CFR Part 153	
Presidential Permit for Power Transmission Line Border Crossing Border Crossing	DOE/OFE Executive Order 10485, amended by Executive Order 12038 10 C.F.R. § 205.320 et seq.	
Power Export Authorization Border Crossing	DOE/OFE 10 CFR § 205.300 et seq.	
Self Certification re: Alternative Fuel Capability	DOE/OFE 42 U.S.C. § 8301, et seq.	
Construction Authorization for International Boundary Border Crossing	United States Section, International Boundary Commission International Boundary Commission Act, Section 2, R.S.C. 1985, cl-16.	
State of Washington		
State Environmental Policy Act (SEPA)	City of Sumas would likely be the SEPA lead agency, absent EFSEC review. Ch. 43.21C RCW; Ch. 197-11 WAC; City of Sumas Municipal Code Ch. 2.65	Parts 3,4,5,8 and 9
Notice of Construction Approval (NOC)	Northwest Air Pollution Central Authority (NWAPCA) Ch. 70.94 RCW; Ch. 173-400 WAC; Ch. 173-460 WAC;	§§ 2.11; 3.2; and Part 6
Prevention of Significant Deterioration (PSD) Permit	NWAPCA Ch. 70.94 RCW; Ch. 173-400 WAC; 40 CFR § 52.21	§§ 2.11; 3.2 and Part 6
Air Operating Permit (Application must be filed within 1 year after facility begins operation) WAC 173-401-500(3)(c)	NWAPCA RCW 70.94; Ch. 173-401 WAC	§§ 2.11 3.2 and Part 6
Acid Rain Permit	NWAPCA 40 CFR Part 72; Ch. 173-401 WAC; Ch. 173-406 WAC	
Hydraulic Project Approval (HPA)	Washington Dept. of Fish & Wildlife Ch. 75.20 RCW; Ch. 220-110 WAC	§ 2.14; 3.1
Water Quality Certification	Ecology, Shorelands and Wetlands Program Federal Clean Water Act, § 401; 33 U.S.C. § 1344; Ch. 173-225 WAC	§ 5.1.1
Coastal Zone Management Program Consistency Certification	Ecology, Shorelands and Wetlands Program 16 U.S.C. § 1451 et seq.; 15 CFR parts 923-930; Ch. 173-27 WAC	§ 5.1.1

APPLICABLE FEDERAL, STATE AND LOCAL PERMIT REQUIREMENTS

Permit or Requirement	Agency/Statute & Regulation	Application §§
NPDES and State Waste Discharge Baseline Gene al Permit for Stormwater Discharge Associated with Construction and Industrial Activities	Ecology, Water Quality Program Federal Clean Water Act, 40 CFR Parts 122, 123 & 124, Subchapter D; Chs. 80.50 & 90.48 RCW; Chs. 173-216 & 220 WAC	§ 2.10; 7.1
Industrial Waste Discharge Permit for wastewater discharges to Sumas sewer system	Ecology, Water Quality Program RCW 90.48.160; Ch. 173-216 WAC	
Franchise/Encroachment Permit (Boring gas pipeline)	Department of Transportation Ch. 468-34 WAC	
Natural Gas Pipeline Construction Approval	Washington Utilities and Transportation Commission Ch. 80.28 RCW	
Electrical Construction Permit	Department of Labor & Industries Ch. 296-746 WAC	
Local – Whatcom County (Gas Pipeline Only)		
Accommodation of Utilities on Right-of-Way and Utility Construction Approval (Right of Way/Easement)	Whatcom County Engineer Chs. 12.27; 12.28 Whatcom County Code (WCC)	
Road Approach Construction Permit	Whatcom County Engineer Ch. 12.12 WCC	
Encroachment Permit	Whatcom County Transportation Services Ch. 12.16 WCC	
Building Permit	Whatcom County Building Official CH. 15.04 WCC	
Local - City of Sumas		
Comprehensive Land Use Plan and Zoning Compliance	City of Sumas Ch. 20.44 Sumas Municipal Code (SMC)	§ 2.1.4; 5.1
Compliance with City of Sumas Wetland Protection Ordinance	City of Sumas Ch. 15.16 SMC	§ 5.1.1
Shoreline Substantial Development Permit	City of Sumas City of Sumas Shoreline Management Master Program.	§ 5.1.1
Flood Risk Zone Permit and/or Flood Hazard Development Permit	Sumas City Utilities Superintendent Ch. 14.30 SMC	§ 5.1.1
Compliance with Noise Regulations	City of Sumas Police Department Ch. 8.26 SMC; Ch. 70.107 RCW; Ch. 173-60 WAC; Ch. 8.26 SMC	§ 4.1.1
Building Permits (Civil, Structural, Mechanical, Plumbing)	City of Sumas Ch. 14.04 SMC (adopting the UBC, UPC, UFC, and UMC)	§ 5.1.1
Fire Marshal Permit	City of Sumas Fire Marshall Uniform Fire Code (UFC) §§ 4.108 and 80.103	§ 2.9

Exhibit C

40992_30.CDR

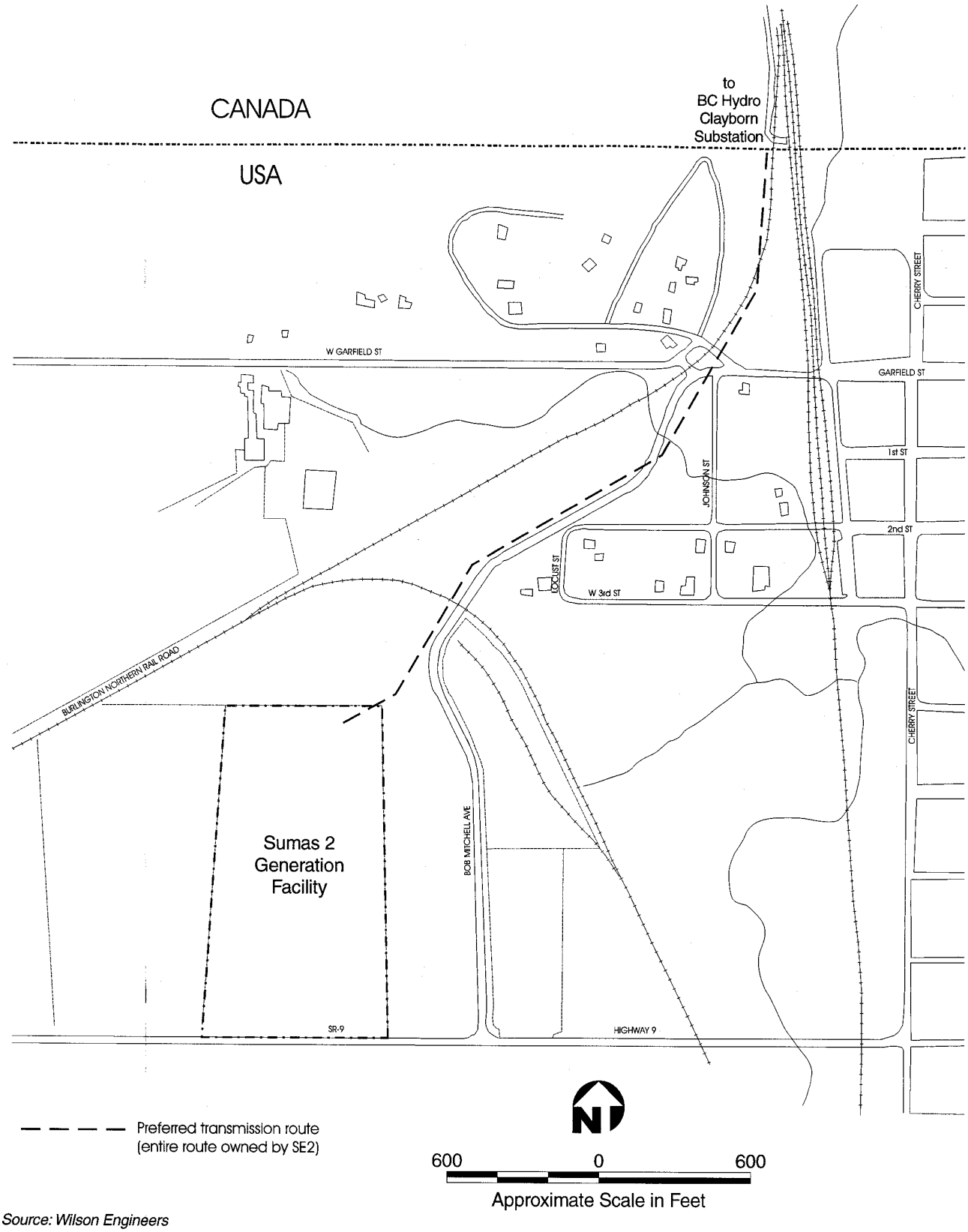

Source: Wilson Engineers

DAMES & MOORE
A DAMES & MOORE GROUP COMPANY

PREFERRED TRANSMISSION ROUTE

Job No. 40992-002-020

Sumas Energy 2
Sumas, Washington

40992_57.CDR

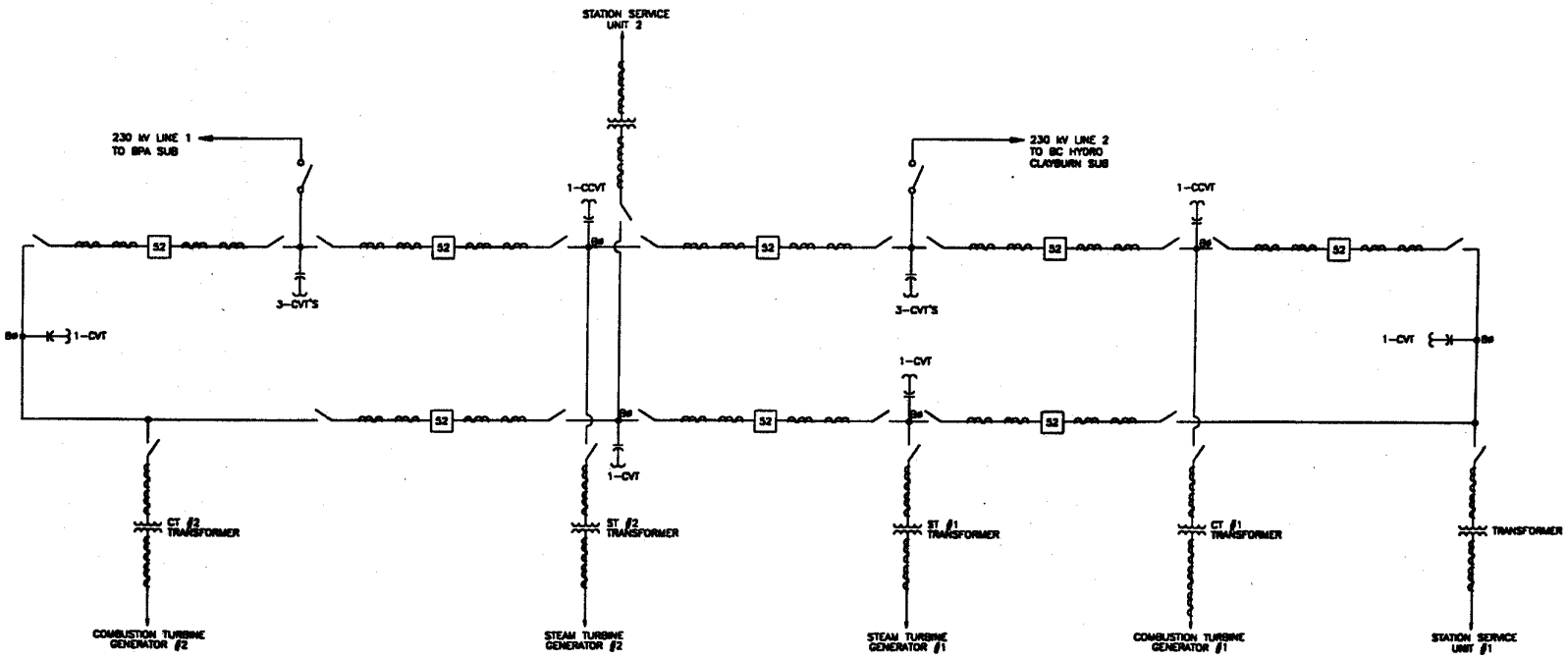

Source: Black & Veatch

DAMES & MOORE
A DAMES & MOORE GROUP COMPANY

Figure 2.4-1
230 KV RING BUS SUBSTATION ONE-LINE

Sumas Energy 2

40992_29.CDR

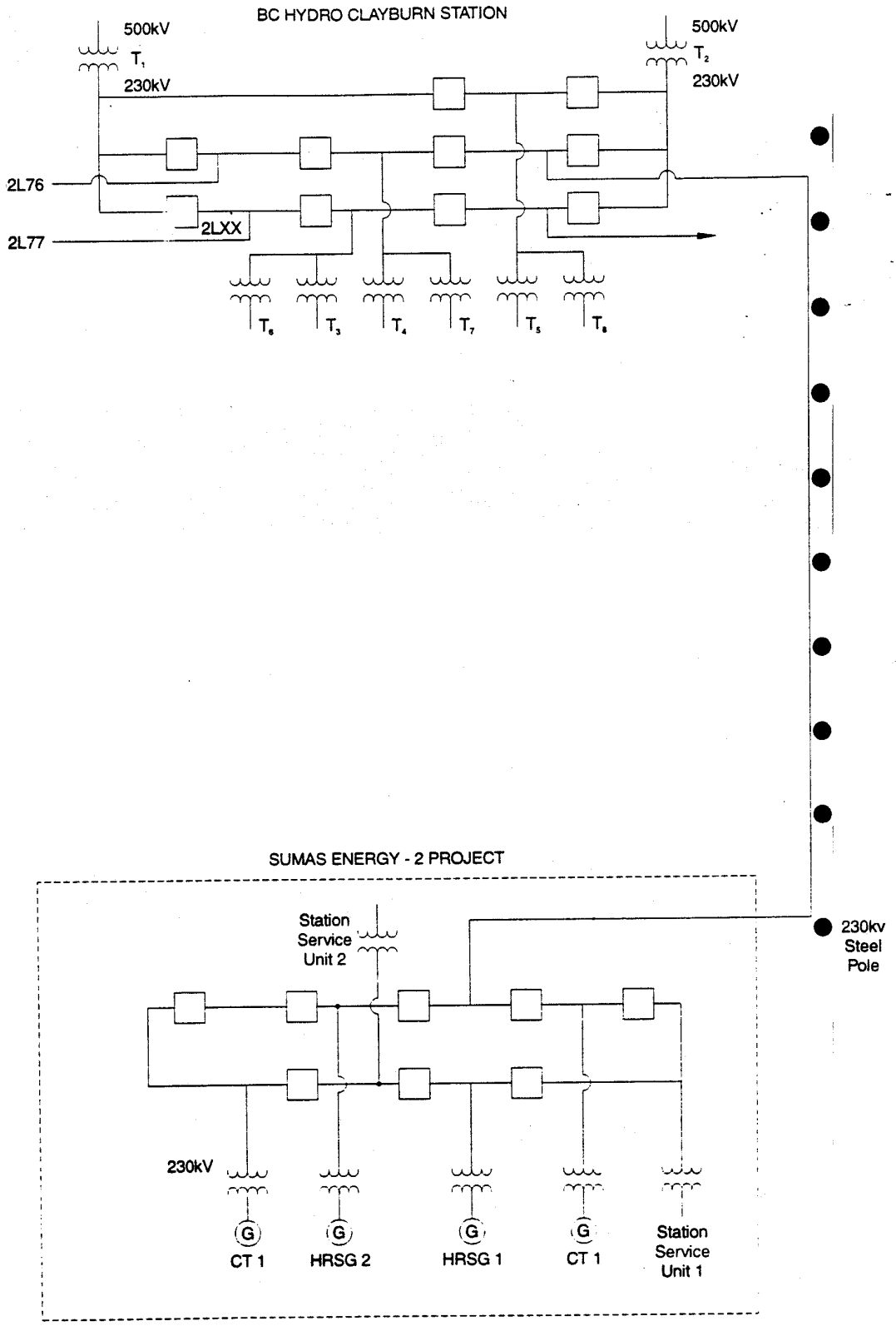

DAMES & MOORE
A DAMES & MOORE GROUP COMPANY

Job No. 40992-002-020

Figure 8.2-1
ONE-LINE ELECTRICAL DIAGRAM

Sumas Energy 2
Sumas, Washington

40992_40.CDR

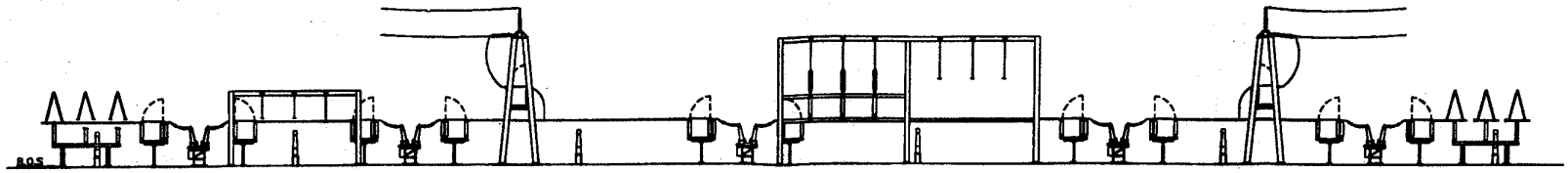

ELEVATION A
LOOKING SOUTH

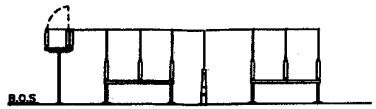

ELEVATION B
LOOKING WEST 1

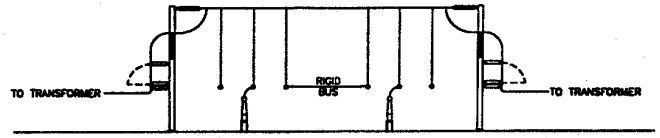

ELEVATION C
LOOKING WEST 2

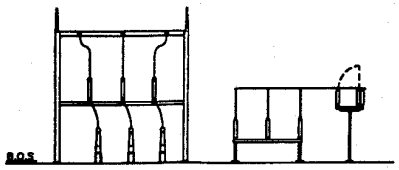

ELEVATION D
LOOKING EAST

NOT TO BE USED FOR CONSTRUCTION
DATE OF ISSUE _____

Source: Black & Veatch

DAMES & MOORE
A DAMES & MOORE GROUP COMPANY

Job No. 40992-002-020

Figure 2.4-3
230 KV OPTION "B" SUBSTATION ELEVATION

Sumas Energy 2
Sumas, Washington

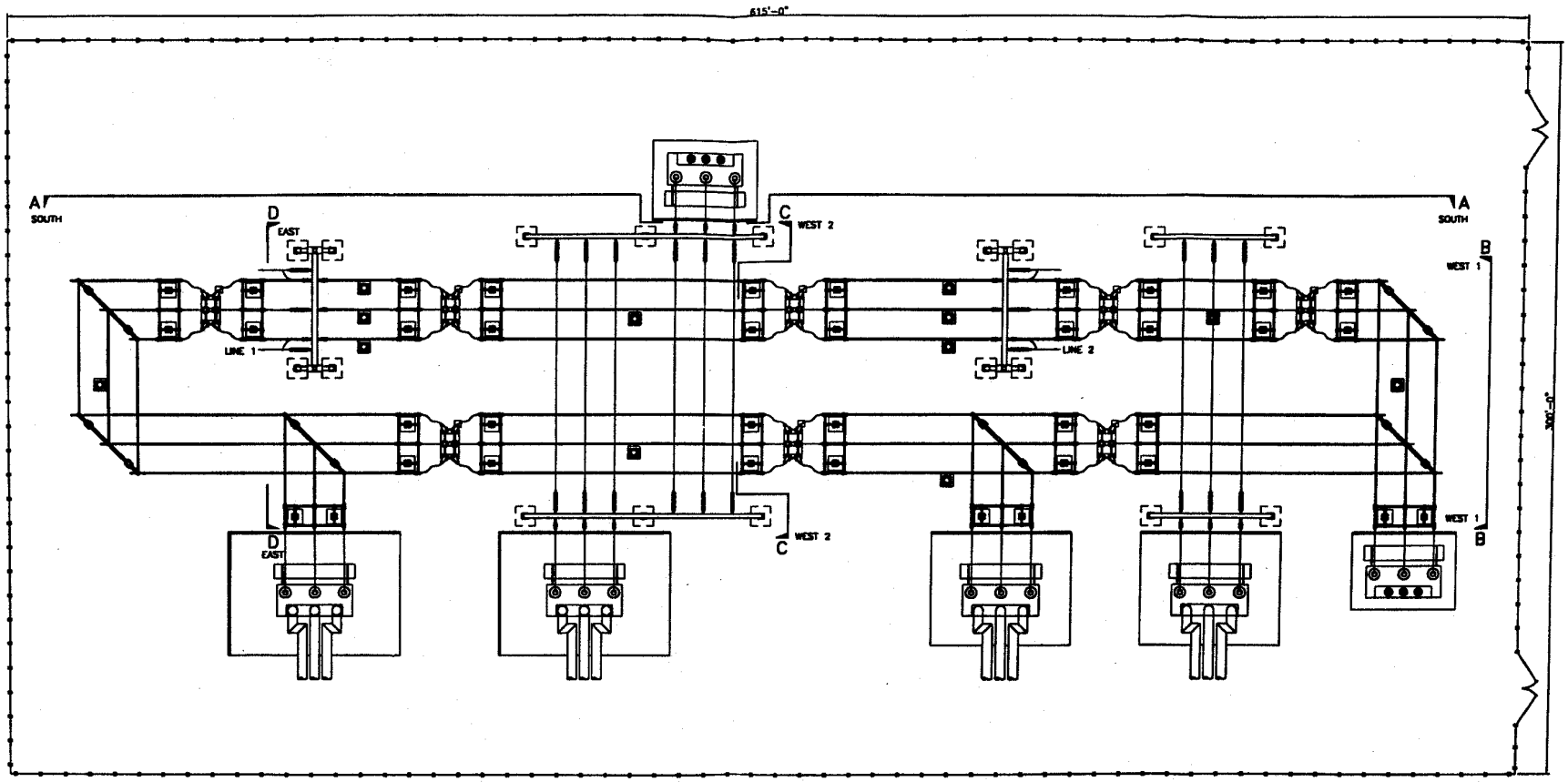

NOT TO BE USED FOR CONSTRUCTION

DATE OF ISSUE _____

Source: Black & Veatch

DAMES & MOORE
A DAMES & MOORE GROUP COMPANY

Job No. 40992-002-020

Figure 2.4-2
230 KV OPTION "B" SUBSTATION ARRANGEMENT

Sumas Energy 2
Sumas, Washington

Exhibit D

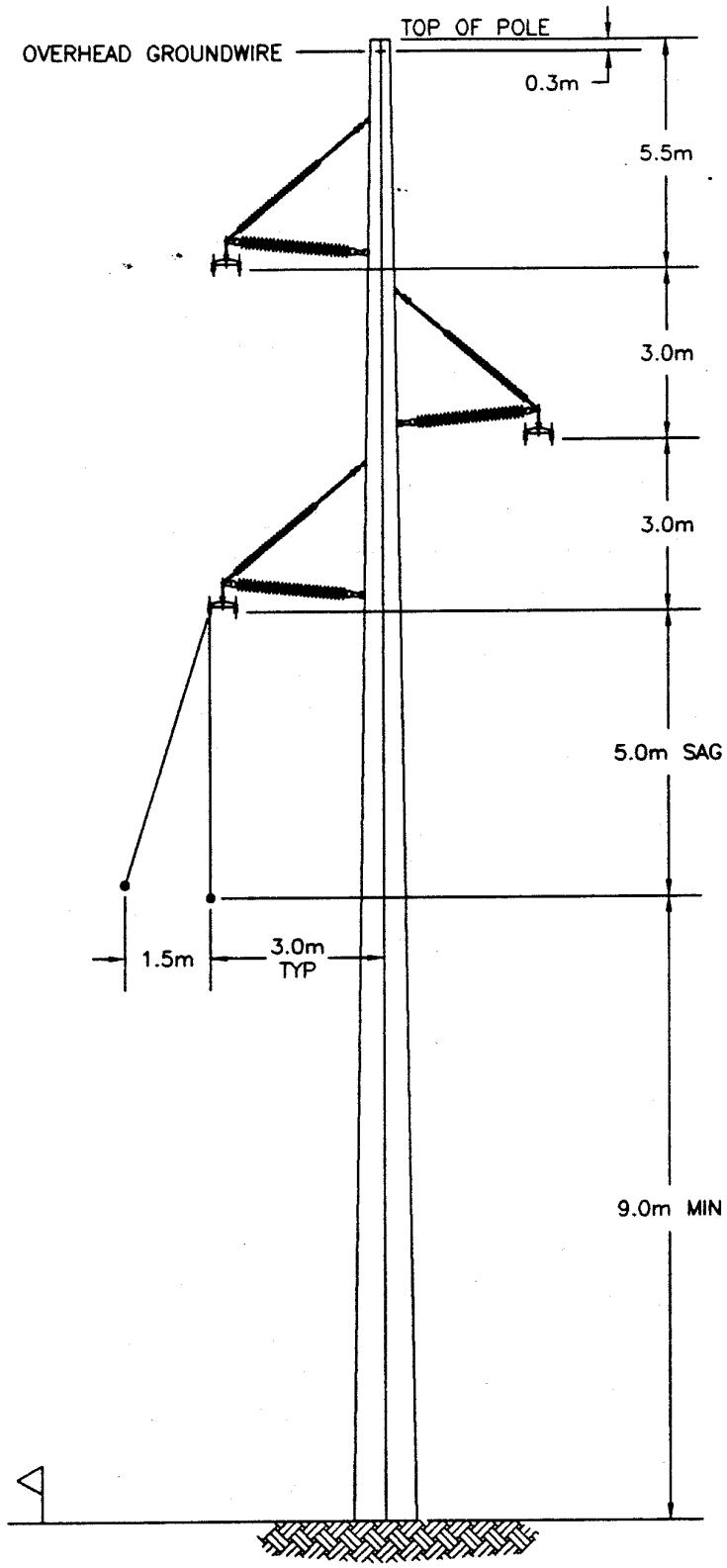

IAN HAYWARD INTERNATIONAL
305-16088 - 84th AVENUE
SURREY, BRITISH COLUMBIA
CANADA V3S 2P1
PHONE (604) 599-6088

NESCO SUMAS II

TITLE :
SUMAS II SUBSTATION – CLAYBURN SUBSTATION
PROPOSED 230 kV TRANSMISSION LINE
TANGENT STRUCTURE (710 MW LINE)

SCALE: N.T.S.	DATE: JULY 09,1998
DRAWN: I.M.B.	CHECKED:
APPROVED:	
DRAWING NO: 9809-02	REV:

EXHIBIT "D"

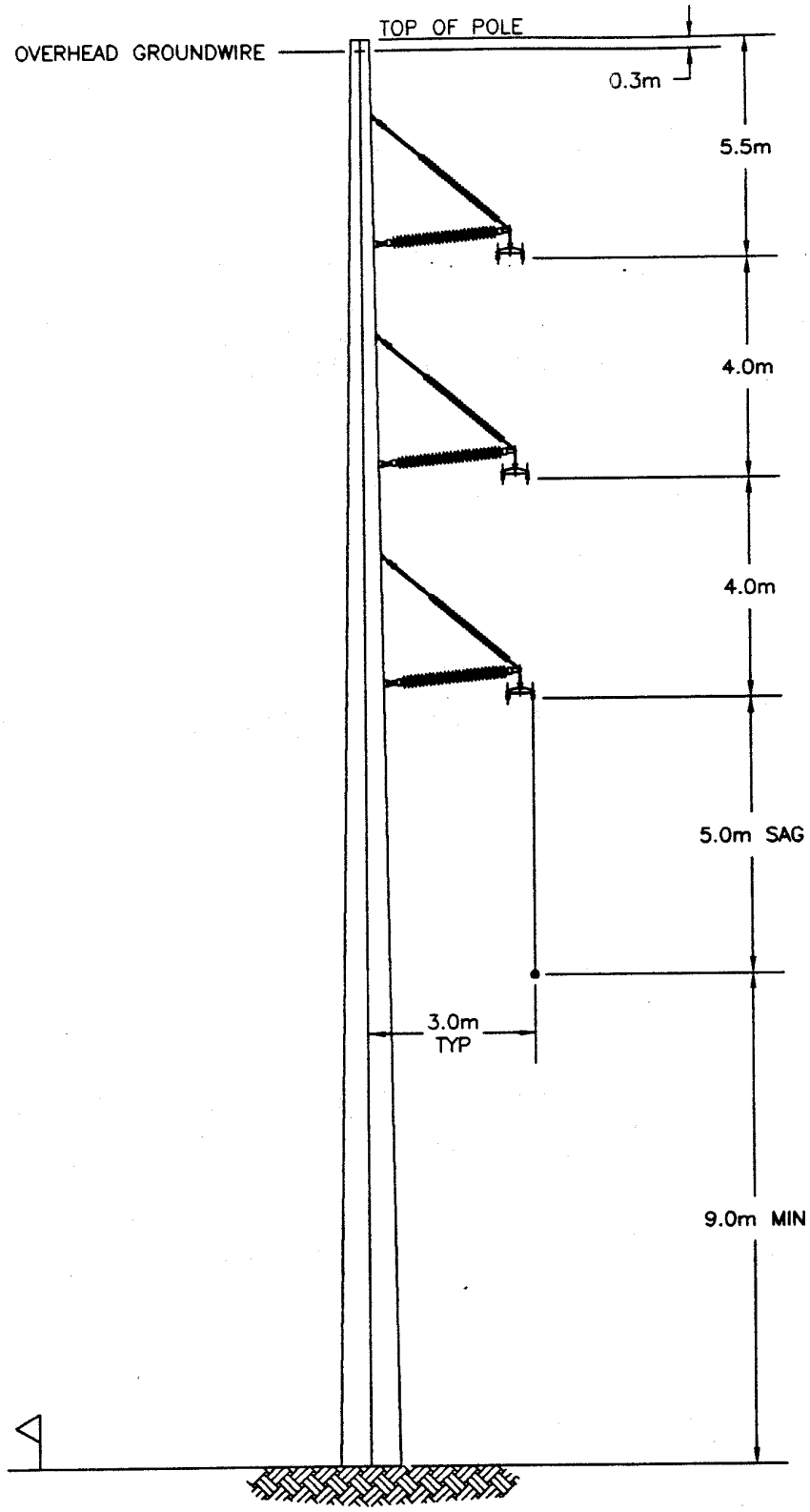

IAN HAYWARD INTERNATIONAL
305-16088 - 84th AVENUE
SURREY, BRITISH COLUMBIA
CANADA V3S 2P1
PHONE (604) 599-6088

NESCO SUMAS II

TITLE :
SUMAS II SUBSTATION – CLAYBURN SUBSTATION
PROPOSED 230 kV TRANSMISSION LINE
MEDIUM ANGLE STRUCTURE (710 MW LINE)

SCALE: N.T.S.	DATE: JULY 09,1998
DRAWN: I.M.B.	CHECKED:
APPROVED:	
DRAWING NO: 9809-03	REV:

EXHIBIT "D"

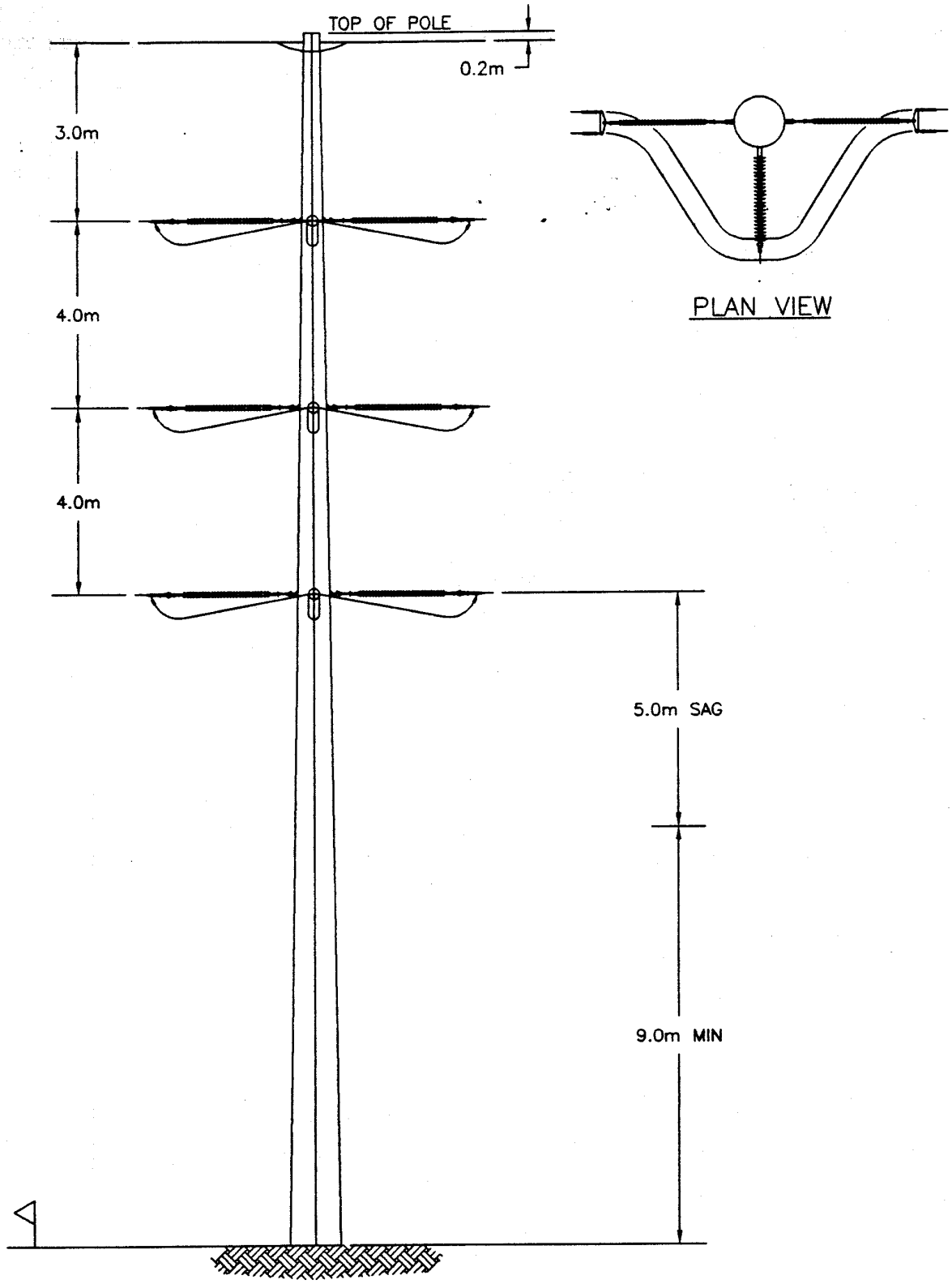

IAN HAYWARD INTERNATIONAL 305-16088 - 84th AVENUE SURREY, BRITISH COLUMBIA CANADA V3S 2P1 PHONE (604) 599-6088	NESCO SUMAS II	SCALE: N.T.S.	DATE: JULY 09,1998
		DRAWN: I.M.B.	CHECKED:
	TITLE : SUMAS II SUBSTATION – CLAYBURN SUBSTATION PROPOSED 230 kV TRANSMISSION LINE 0–45° DEADEND STRUCTURE (710 MW LINE)	APPROVED:	
		DRAWING NO: 9809–06	REV:

EXHIBIT "D"

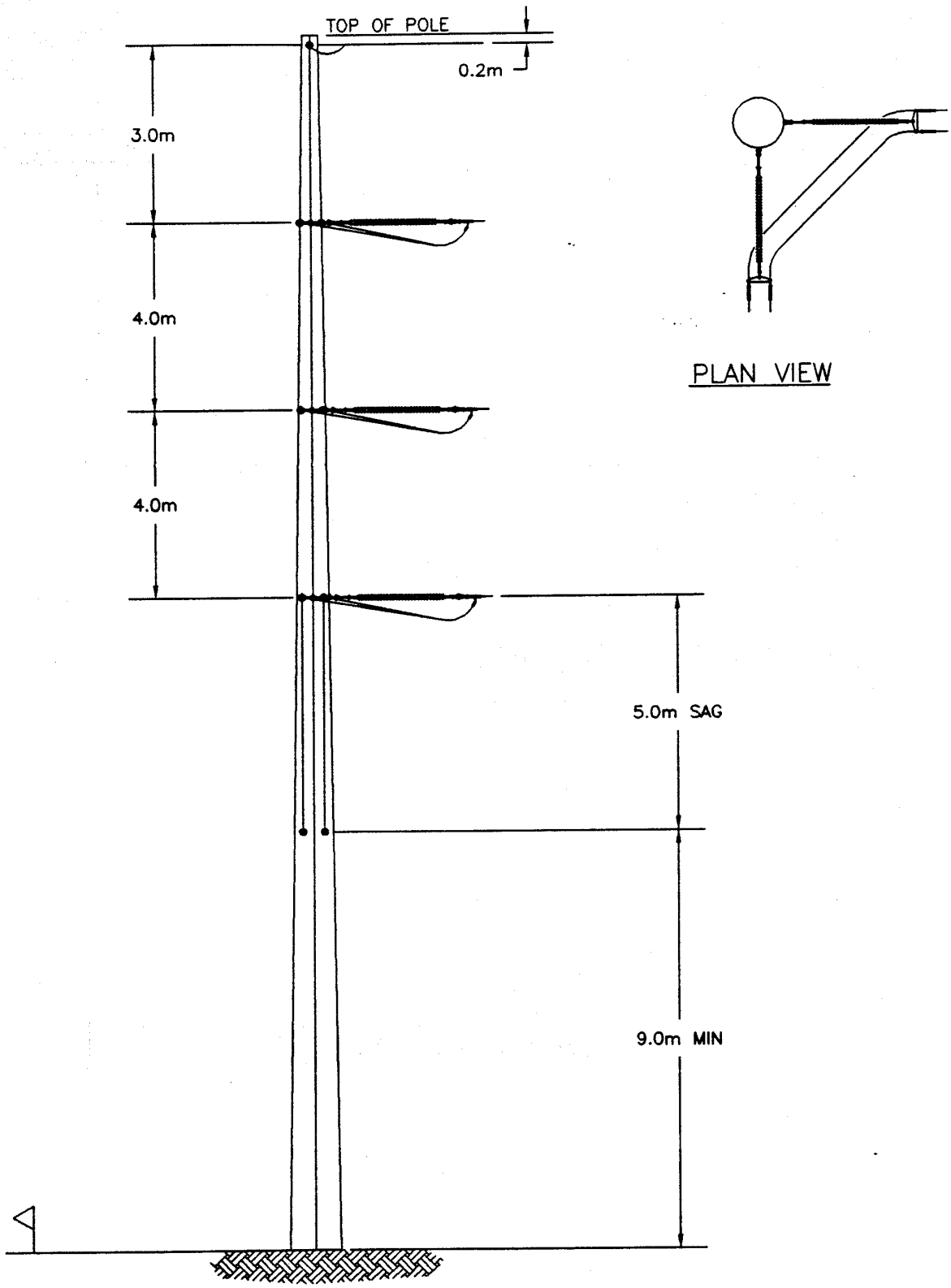

IAN HAYWARD INTERNATIONAL
305-16088 - 84th AVENUE
SURREY, BRITISH COLUMBIA
CANADA V3S 2P1
PHONE (604) 599-6088

NESCO SUMAS II

TITLE :
SUMAS II SUBSTATION – CLAYBURN SUBSTATION
PROPOSED 230 kV TRANSMISSION LINE
45-90° DEADEND STRUCTURE (710 MW LINE)

SCALE: N.T.S.	DATE: JULY 09,1998
DRAWN: I.M.B.	CHECKED:
APPROVED:	
DRAWING NO: 9809-07	REV:

EXHIBIT "D"

Exhibit E

40992_14.CDR

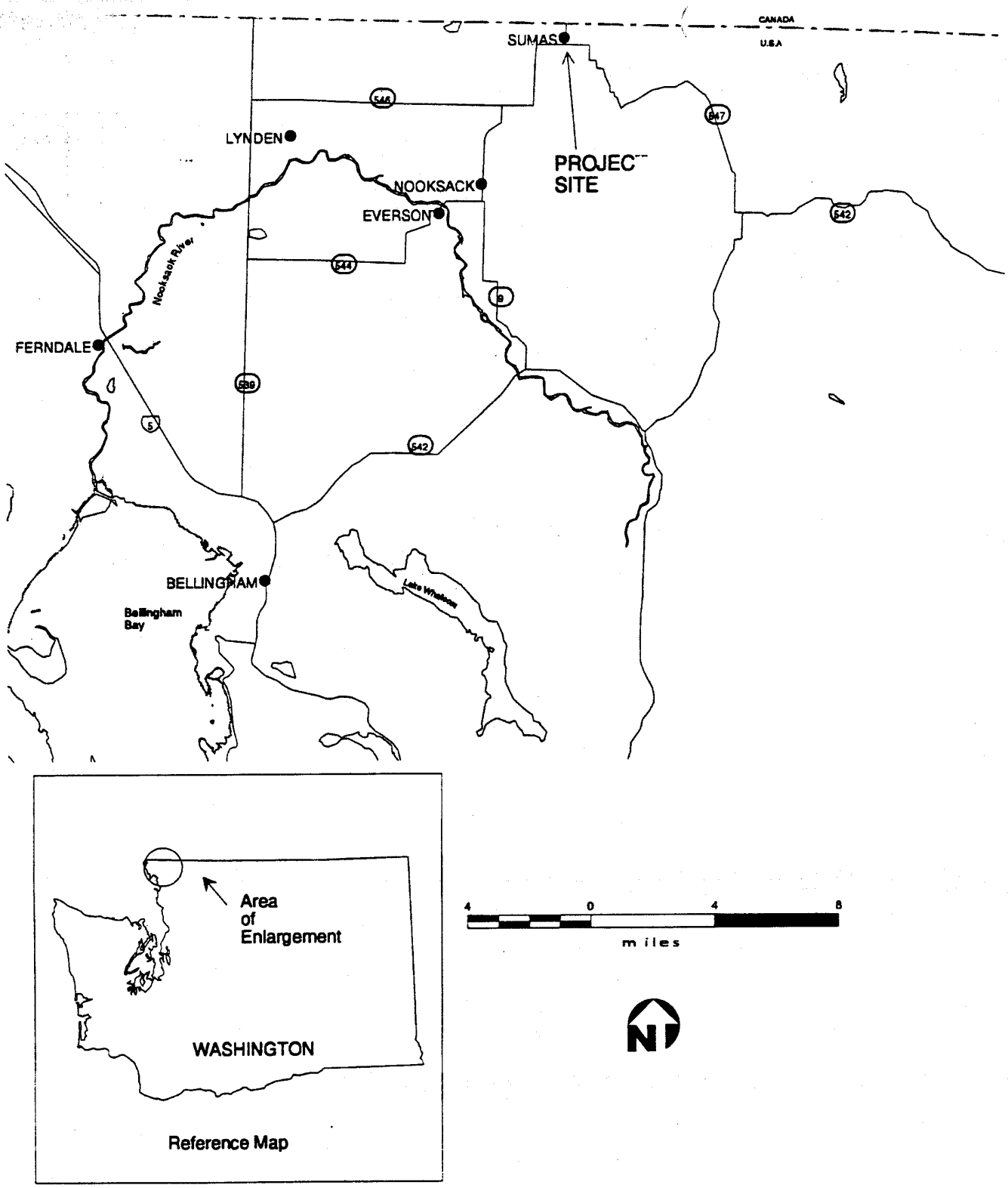

DAMES & MOORE
A DAMES & MOORE GROUP COMPANY

Job No. 40992-002-020

Figure 2.1-1
GENERAL VICINITY

Sumas Energy 2
Sumas, Washington

FILE NAME:

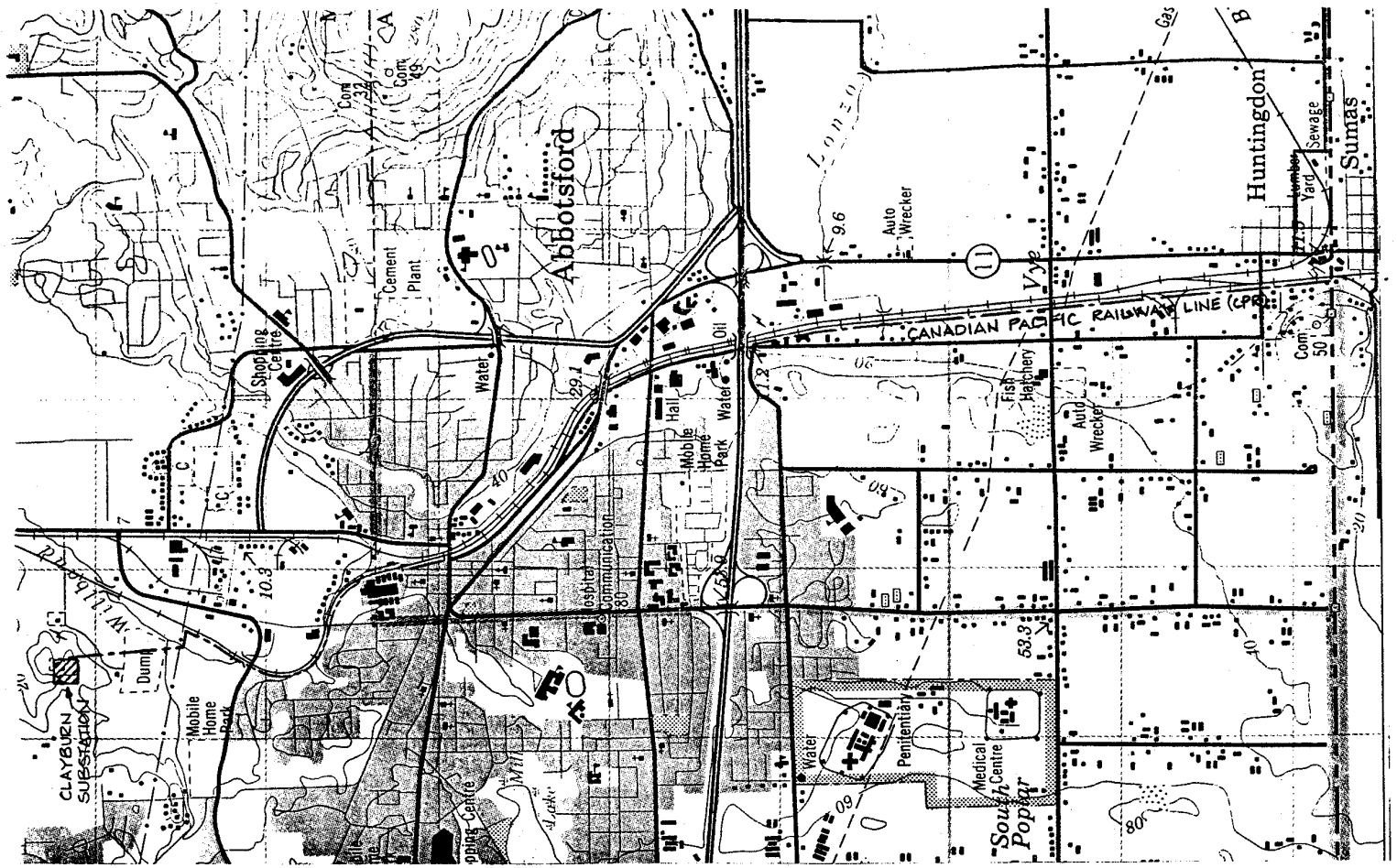

NO.	REVISIONS	DATE

IAN HAYWARD INTERNATIONAL
305-16088 - 84th AVENUE
SURREY, BRITISH COLUMBIA
CANADA V3S 2P1
PHONE (604) 599-6088

SUMAS ENERGY 2, INC.

DRAWING TITLE:
CAN/US BORDER TO CLAYBURN SUB
PROPOSED 230 kV TRANSMISSION LINE
ROUTE PLAN

SCALE: 1:25000		DATE: JANUARY 20 1999	
DRAWN: I.M.B.		CHECKED:	
APPROVED:			
DRAWING NO: 9809-10			REV: 0

Exhibit F

State of Washington

King County

The undersigned, David N. Eaden, having been first duly sworn, deposes and says that he is the Vice President, Engineering and Construction, for Sumas Energy 2, Inc., that he has reviewed the foregoing "Application of Sumas Energy 2, Inc. for Presidential Permit" ("Application"), and he has knowledge of the matters set forth in the Application, and that such Application is, to the best of his knowledge and belief, accurate and true.

David N. Eaden

Dated: January 20, 1999

Sworn and subscribed before me on this 20th day of January, 1999.

BRENDA BIGHAM
COMMISSION EXPIRES
NOTARY
PUBLIC
AUGUST 9, 2001
STATE OF WASHINGTON

Notary Public in and for the State of Washington, residing in King County. My Commission expires August 9, 2001.